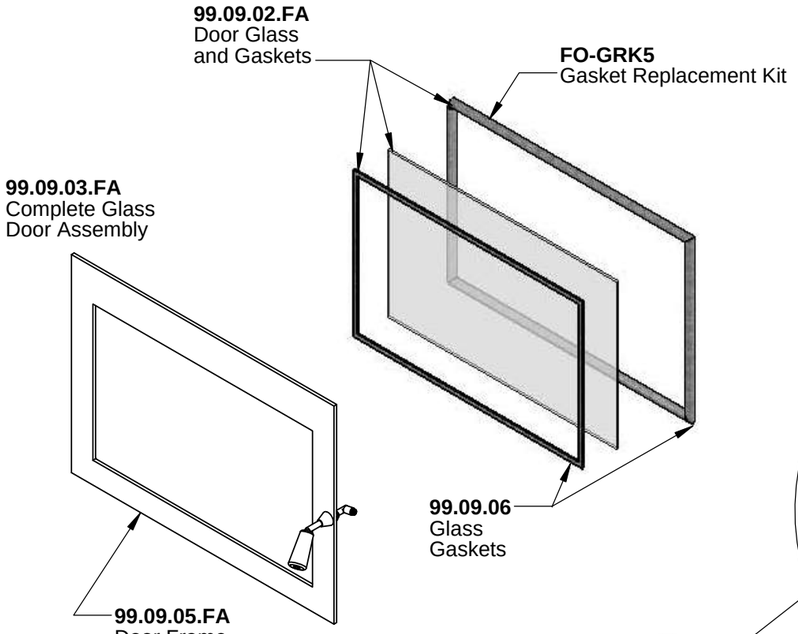

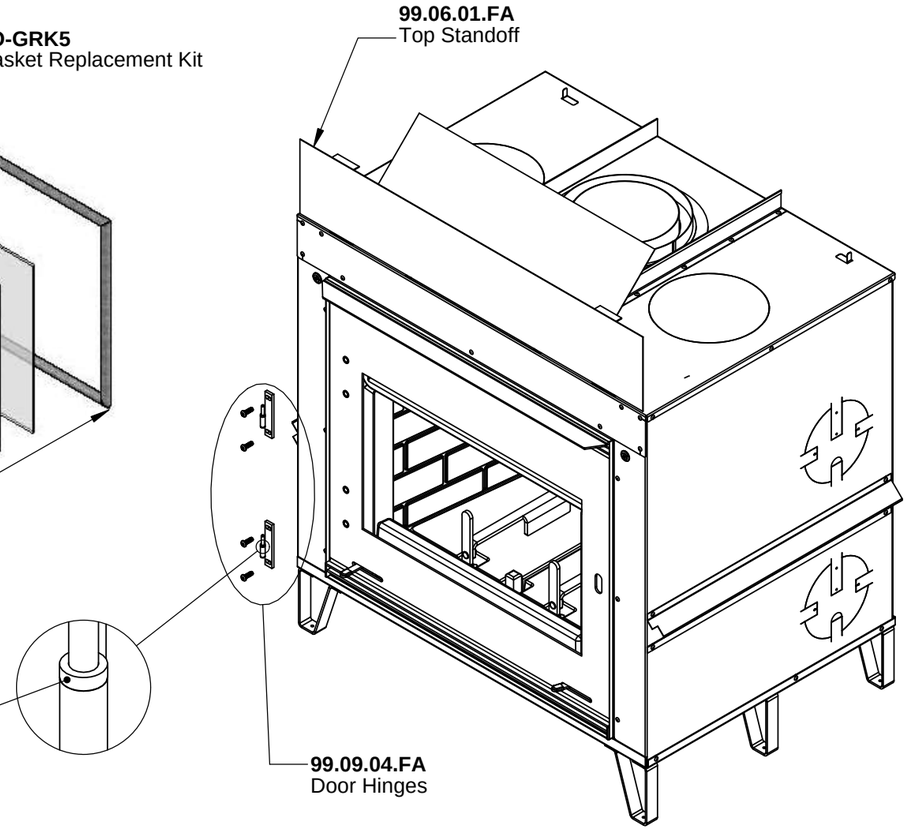

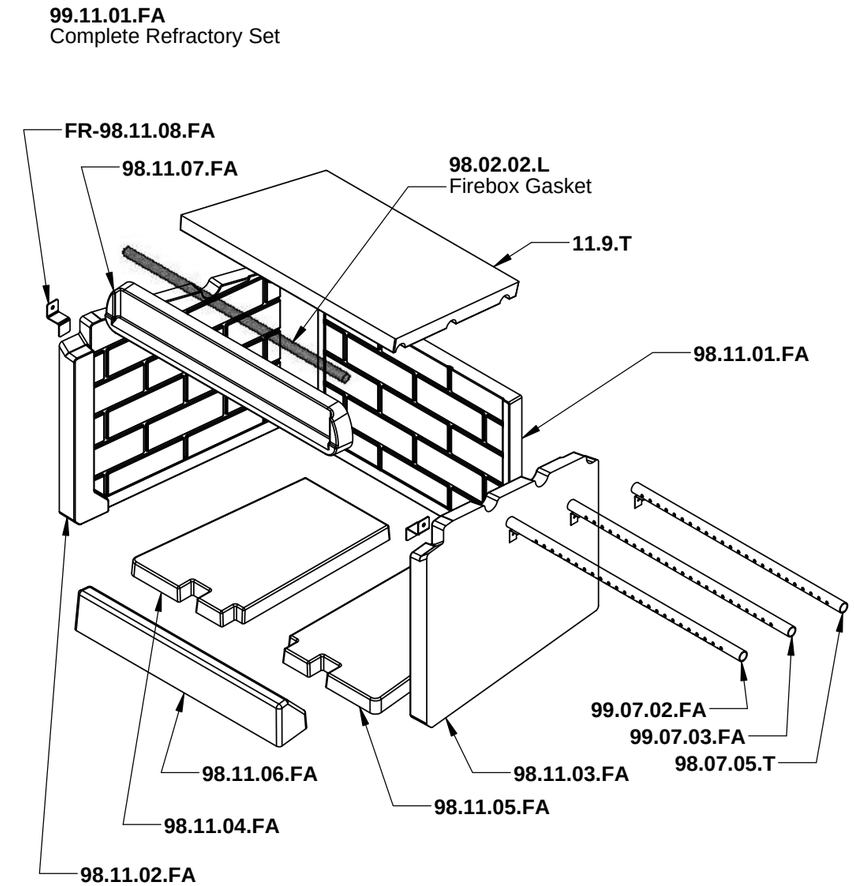

99.12.01.FA
Log Retainer Kit (Front Part)

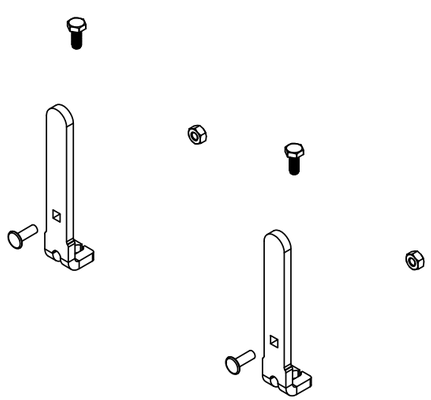

99.12.02.FA
Log Retainer Kit (Back Part)

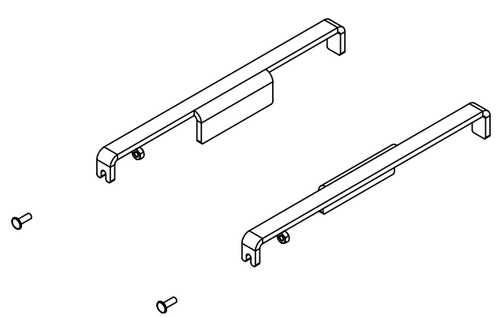

99.05.01.FA
Outside Air Elbow

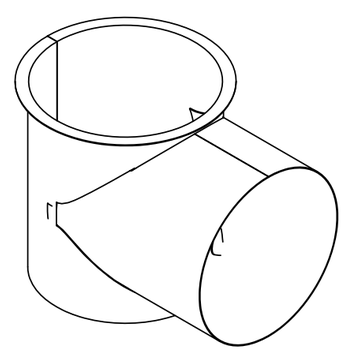

99.09.01.FA
Door Handle Assembly

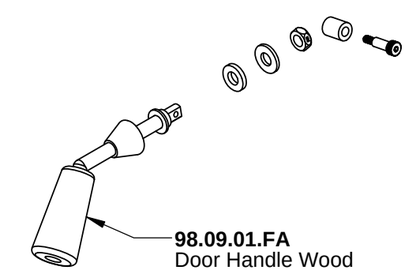

Serial Number Prior to : FA01034
Retrofit : ER-99.09.99

99.07.01.FA
Primary Air Control Handle

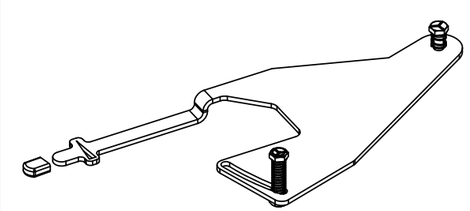

RSF
WOODBURNING FIREPLACES

FOCUS 250

RSF
FOYERS AU BOIS

DATE	REV.
2017-05-03	02